@ansell_lighting
ansellighting
Ansell Lighting
ansell_lighting

Edge GU10 Fire Rated

Category	Downlights
Application	Hospitality, Residential, Retail
Specification	Architectural

Edge GU10 Fire Rated Downlight Matt White

Code: AEFRD/MW

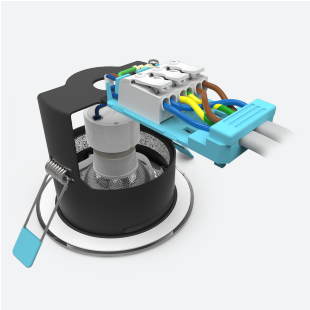

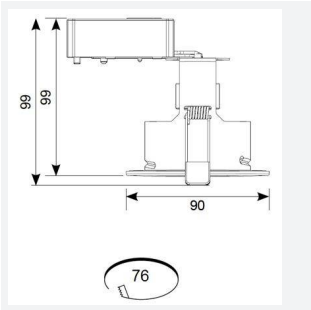

PRODUCT FEATURES

- Suitable for standard GU10 halogen or LED lamps
- Protective sheathing spring clips for ease of installation and ceiling protection
- Twistlock lamp retaining ring for ease of lamp replacement
- Option to add Bluetooth and WiFi enabled smart WiZ GU10 lamp
- Suitable for standard GU10 halogen or LED lamps
- Push fit terminals for fast loop-in, loop-out wiring
- Ultra-slim bezel profile

GENERAL INFORMATION	
Wattage	50W
Input	220/240V
Operating Temp	0°C - 25°C
Cut-Out Size	76mm

TECHNICAL INFORMATION	
Light Source	GU10
Colour / Finish	Matt White
Fire Rated	Yes
IP Rating	IP20
Class Protection	1
Internal / External	Internal
Surface / Recessed / Suspended	Recessed
Warranty (Years)	5
CE Mark	Yes
Diameter	90 mm
Height	105 mm
Accessories	AEFRISD